D136

13.6" 7K
LARGE PRINTING SIZE PROFESSIONAL 3D PRINTER

D136 LCD 3D printer

XY axis accuracy 0.046mm

6480*3600 pixels high resolution

298×165×300mm printing size

Six big features
Reshape your imagination

**13.6"7K
Monochrome screen**

6480*3600 pixels

298×165×300

Extra large print size
Surface sandblasting oxidation
with hole forming platform

XY axis accuracy 46μm

More stable
and higher precision

**Self-developed
LCD technology**

Self-developed Integrated
Light source LCD Printer

Stable Z-axis structure

Dual linear guide rail design
+ ball screw Dramatically improve
positioning accuracy

**High speed
release film**

High speed release film with
less tripping force,smooth surface
with without laminated striation

13.6" 7K monochrome screen

6480*3600 pixels

Print every detail for you, capturing more subtle and complex details and perfectly print out a smooth, burr-free, and almost layer-free model.

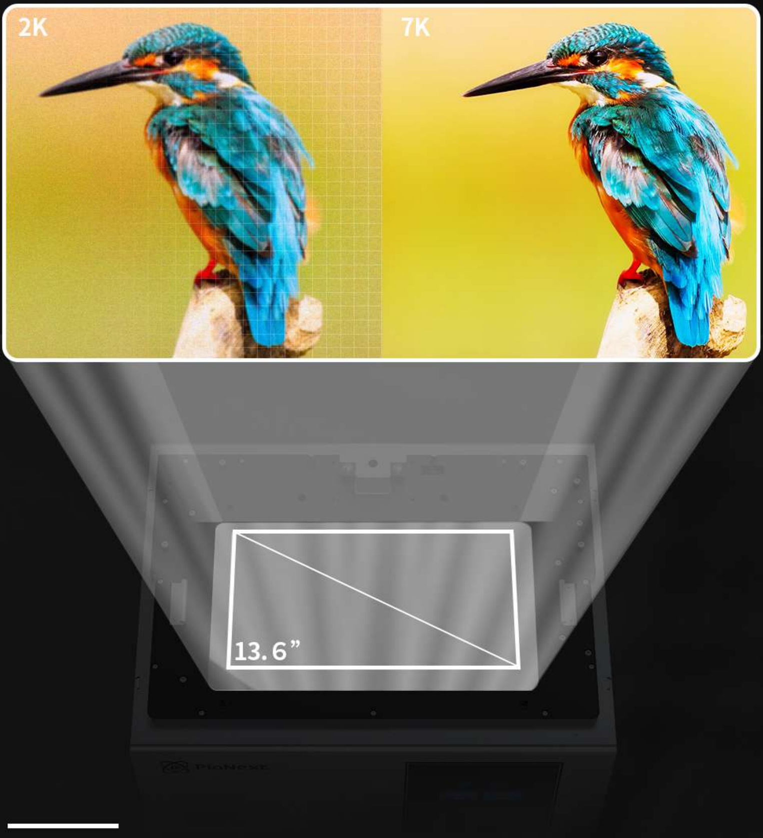

Oxidation sand-blasted

surface perforated platform 298x165x300mm

- A perforated platform allows resin fast reflux during the printing process, increasing the printing speed.
- High roughness oxidation sand-blasted platform surface increases the contact area to provide firmer adhesion for printed models during the printing process, and avoid models falling off.
- The print size can meet a wide variety of dental model printing demands. The printer is capable of printing high-quality model at one time.

Reduce printing time

Improve printing success rate

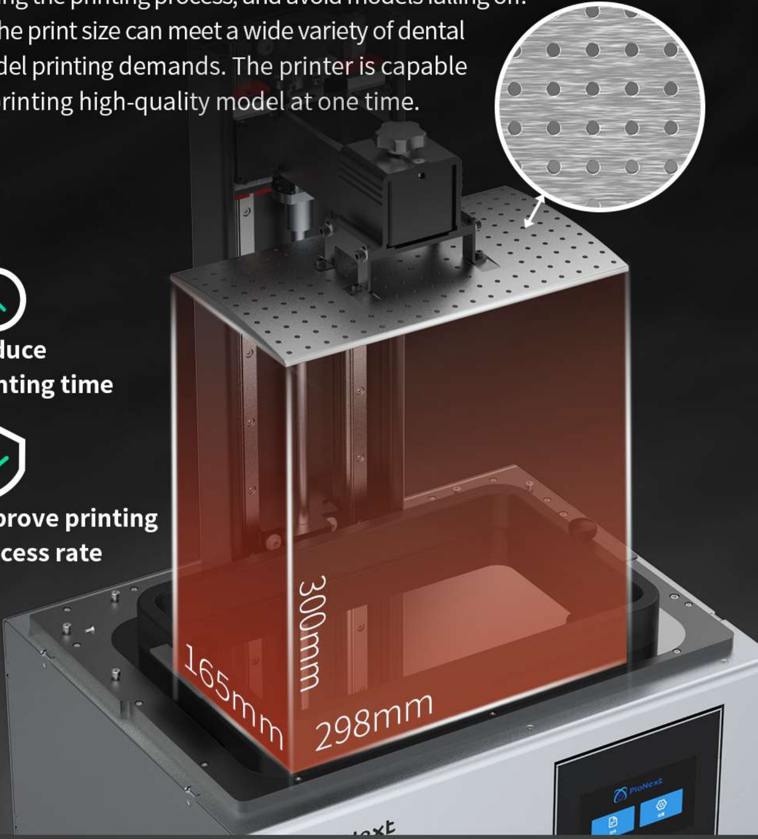

Why select LCD Integral light source 3D printer?

Combines the advantages of DLP and ordinary LCD

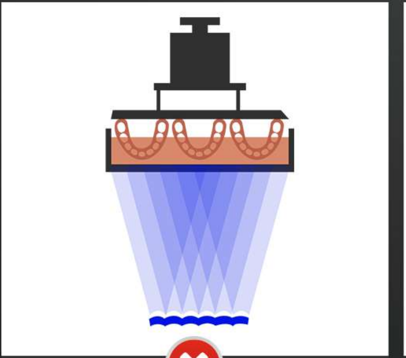

✗

Odinary light source

1.Insufficient light uniformity
2.Requires frequent replacement of light sources
3.High maintenance cost

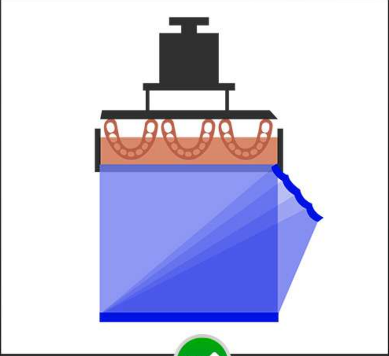

✓

Integrated light source

1.Light uniformity up to 90%
2.Combines the advantages of DLP and ordinary LCD
3.Highly cost effective

High speed release film

High-speed release film with less tripping force, smooth surface with less laminated striation.

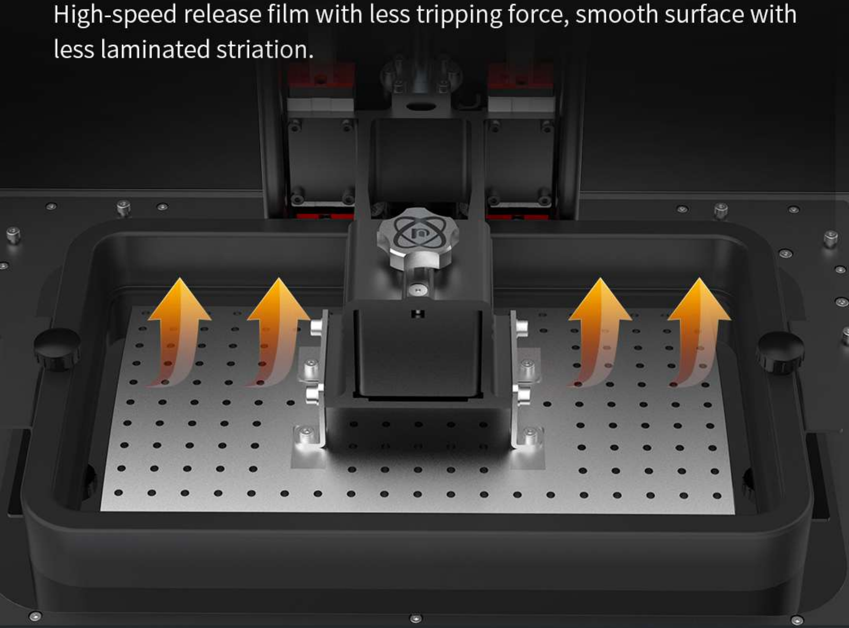

Meet wide range of application printing needs

D136 could accomplish the printing tasks efficiently with high quality, and reduces the laminated structure on the models as much as possible.

Product parameters

Professional dental 3D printer 13.6" 7K large printing size and stable structure

Model:	D136
Light source configuration:	UV integrated lamp beads (wavelength 405nm)
Resolution:	7K13.6 inch black and white screen (6480*3600 pixels)
Slicing software operating system:	Win7 and above 64-bit system, support Mac
printing speed :	1~4s/layer
Lifting speed:	60-180mm/min
Print Layer Thickness:	0.01-0.1mm
XY-axis precision	0.046mm
touch screen:	5 inch capacitive touch screen
Support consumables:	405nm photosensitive resin, compatible with third-party resins
Z axis type:	Double linear guide + ball screw
Print size:	298x165x300mm
Overall size:	480x376x770mm
Packing box specifications:	630x530x1025mm
Slicing software:	PioNext Box
Slice format:	STL, OBJ
Connection method:	U disk/WIFI
Rated voltage:	AC100-240V 50/60 Hz
Rated current:	4-5A

rated power:	500W
Kits:	Manual/Power Adapter /Cartridge /Post-processing Kit
N.W.:	34.7KG
G.W.:	52.15KG