D150

Designed for Dental Applications

DLP 3D Printer

Adjustable light intensity:
6000-20000μW/cm^2

Print size:
144×81×100mm

High printing success rate:
**UV resin,
third-party compatible**

PioNext
PioNext

6000-20000μW/cm2

Optical output power adjustable

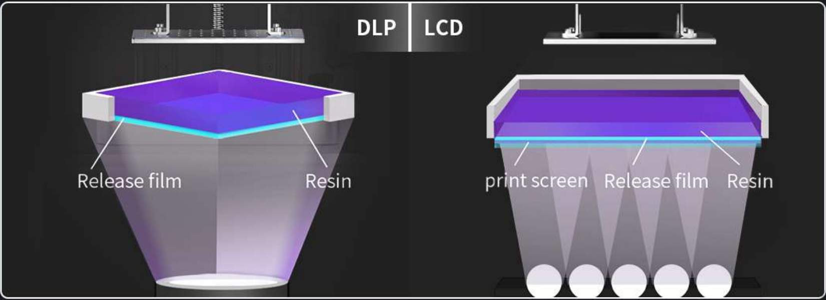

Uniformity≥90%
405nm optical engine

- Optimized software algorithm with distortion compensation ensures regular rectangle opto-mechanical projection.
- Compared with LCD, there is no printing screen heat, It does not affect the expansion rate of the resin, and the printing is more stable.

1-1.5 s

Exposure time of single layer

60-80 mm/h

Printing speed

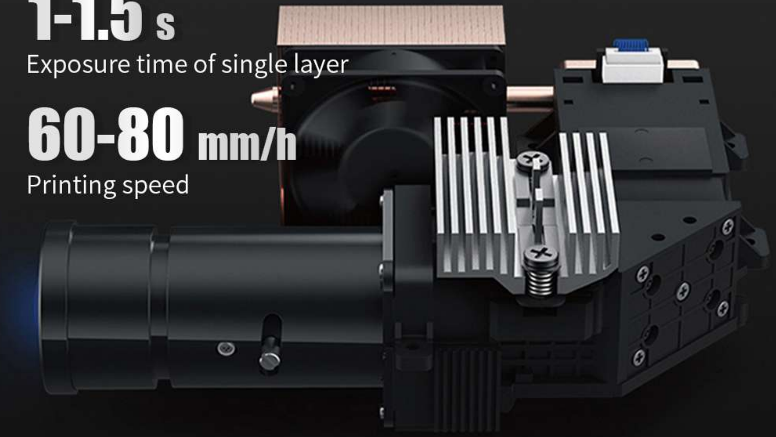

* Piocreat Laboratory Test Data

1920*1080 px
Printing accuracy ±0.05mm

75μm X Y axis resolution, perfectly display tiny details and complex internal structure of the models without layer and burr-free;

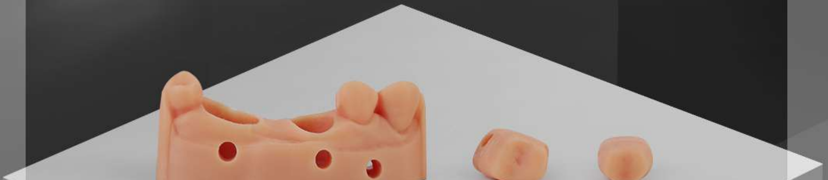

±0.05 mm
Dental mold
≥90 %
Match

Oxidation sand-blasted surface perforated platform

- A perforated platform allows resin fast reflux during the printing process, increasing the printing speed.
- High roughness oxidation sand-blasted platform surface increases the contact area to provide firmer adhesion for printed models

during the printing process, and avoid models falling off.

144x81x100mm

Reduce printing time

Improve printing success rate

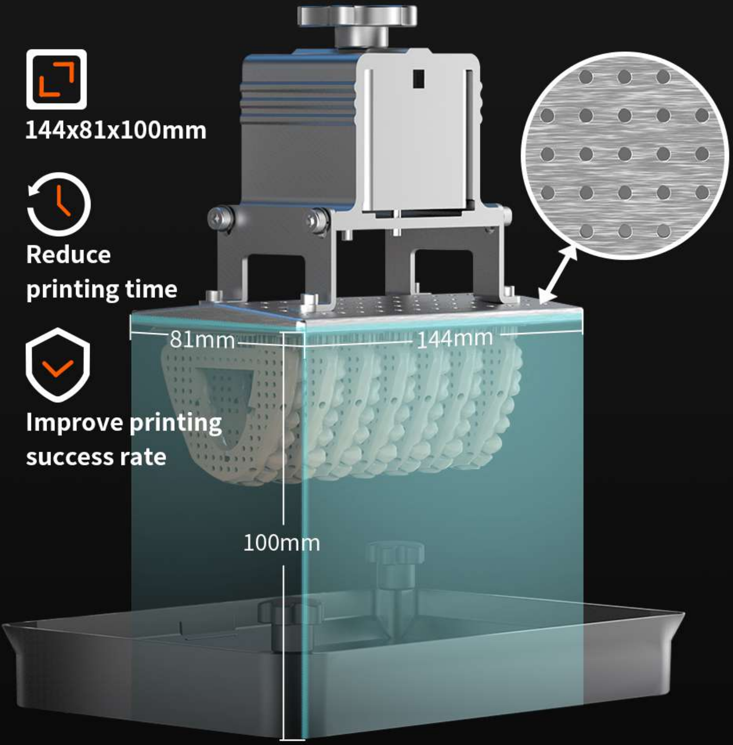

Stable Z-axis structure design

Apply high precision dual linear guide and ball screw on Z-axis. The special mechanical property of ball screw structure provides lubricated, quiet, and smooth movement ensuring quick response and high accuracy lifting on Z-axis. Equipped with a 57 stepper motor, which provides sufficient large torque and releases force, avoiding losing steps.

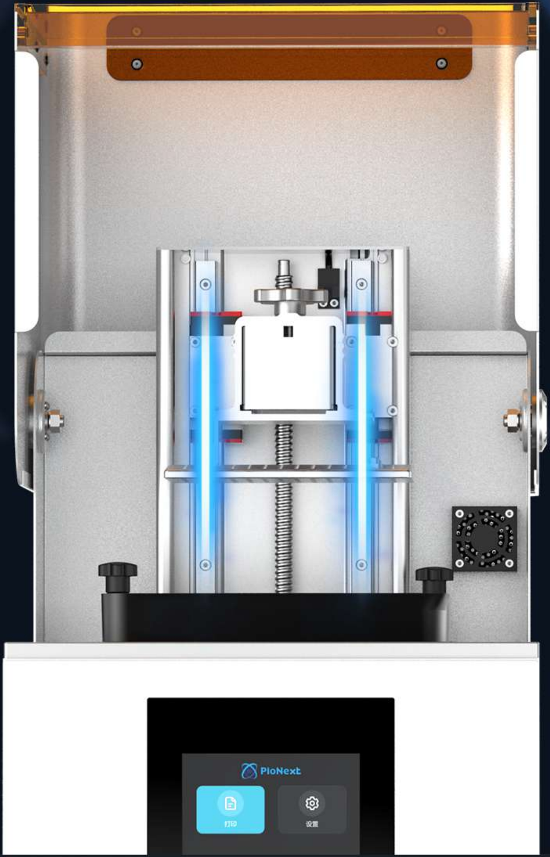

±0.01

Z-axis accuracy

Multi-layer composite high-speed release film

Smooth release film surface, small releasing resistance, and easy stripping completely.

Improve printing speed

Built-in automatic air purification system

Air-cooled heat-dissipating design, heat dissipation and ventilation treatment for light source screen and machine; activated carbon air filtration can absorb and filter resin odor, bringing users a refreshing and comfortable experience.

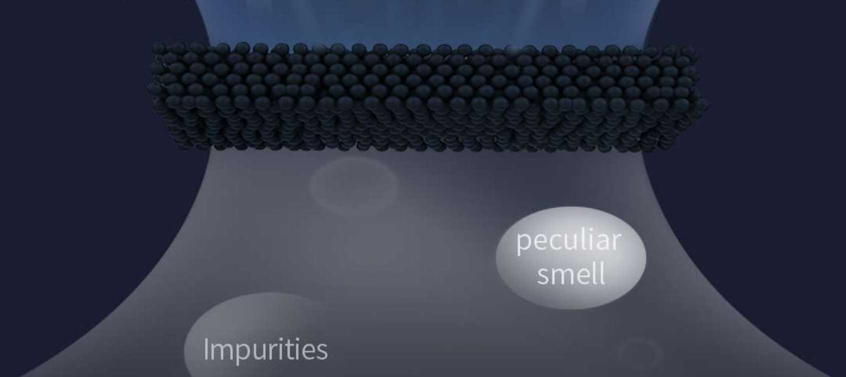

Meet wide range of application printing needs

D150 could accomplish the printing tasks efficiently with high quality, and reduces the laminated structure on the models as much as possible.

Denture

Full Mouth Model

Temp Crown

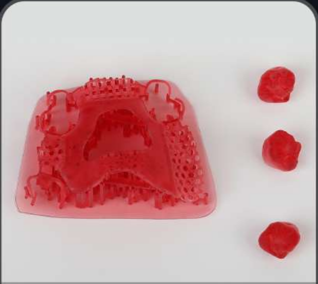

Dental Casting

Dental Studying Model

Gingival Model

Surgical Guide

Wax-up Bracket

Splint

Occlusional Model

Gingival Mask

Indirect Bonding Brackets

Denture Base

Casting Crown

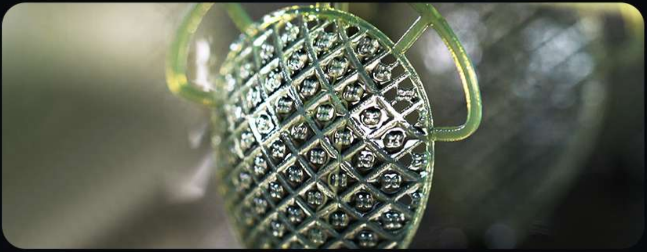

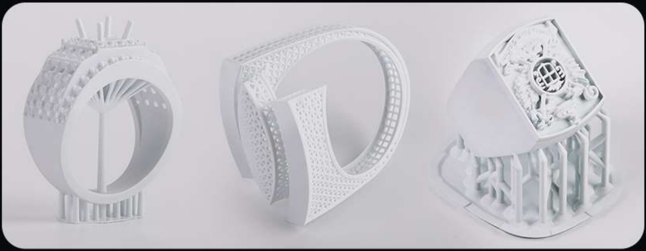

Product parameters

& Resin printing parameters

Newly developed high-power DLP projection light engine, high-definition projection

Model:	D150
Light source configuration:	High power DLP module (405nm)
Rated power:	35W
Slicing software:	Piocreat BOX
Slicing software operating system:	Win7 or above X64, Mac
Printing speed:	60-80mm/h
Print Layer Thickness:	0.01-0.2mm
Touch screen:	5" full color touch screen
Support consumables:	Compatible with all 405nm resins
Z axis type:	Dual Linear Guide + Ball Screw
Supported languages:	Support 13 languages
Print size:	144x81x100mm
Overall size:	327x300x675mm
Packing box specifications:	480x420x820mm
N.W.:	22.11KG
G.W.:	26.5KG

Material name：	PN-RD	PN-Model	PN-Model 2.0	PN-SG	PN-Temp
Initial exposure time：	10s	10s	10s	30s	10s
Light off delay：	2s	2s	2s	2s	2s
Exposure time:	1.5s	1.5s	1s	2s	2s
Lift height：	5mm	5mm	5mm	5mm	5mm
Motor speed：	6mm/s	6mm/s	6mm/s	6mm/s	6mm/s
Botton layer：	1 layer	1 layer	1 layer	1 layer	1 layer

Material name：	PN-CAST	PN-JC20	PN-JC15	PC-PLA	PC-Flexible
Initial exposure time：	10s	50s	50s	10s	30s
Light off delay：	2s	2s	2s	2s	2s
Exposure time:	2.5s	3.4s	3.4s	1.5s	2s
Lift height：	5mm	5mm	5mm	5mm	5mm
Motor speed：	6mm/s	2mm/s	2mm/s	6mm/s	3mm/s
Botton layer：	1 layer	4 layer	4 layer	1 layer	1 layer

Material name：	PC-ABS	PC-Clear	PN-Gingiva	PC-Rigid	PC-WW
Initial exposure time：	10s	10s	10s	10s	10s
Light off delay：	2s	2s	2s	2s	1s
Exposure time:	1s	1.8s	1.8s	1s	3s
Lift height：	5mm	5mm	5mm	5mm	8mm
Motor speed：	6mm/s	6mm/s	6mm/s	6mm/s	5mm/s
Botton layer：	1 layer	1 layer	1 layer	1 layer	1 layer